P 22-32 / 82-98

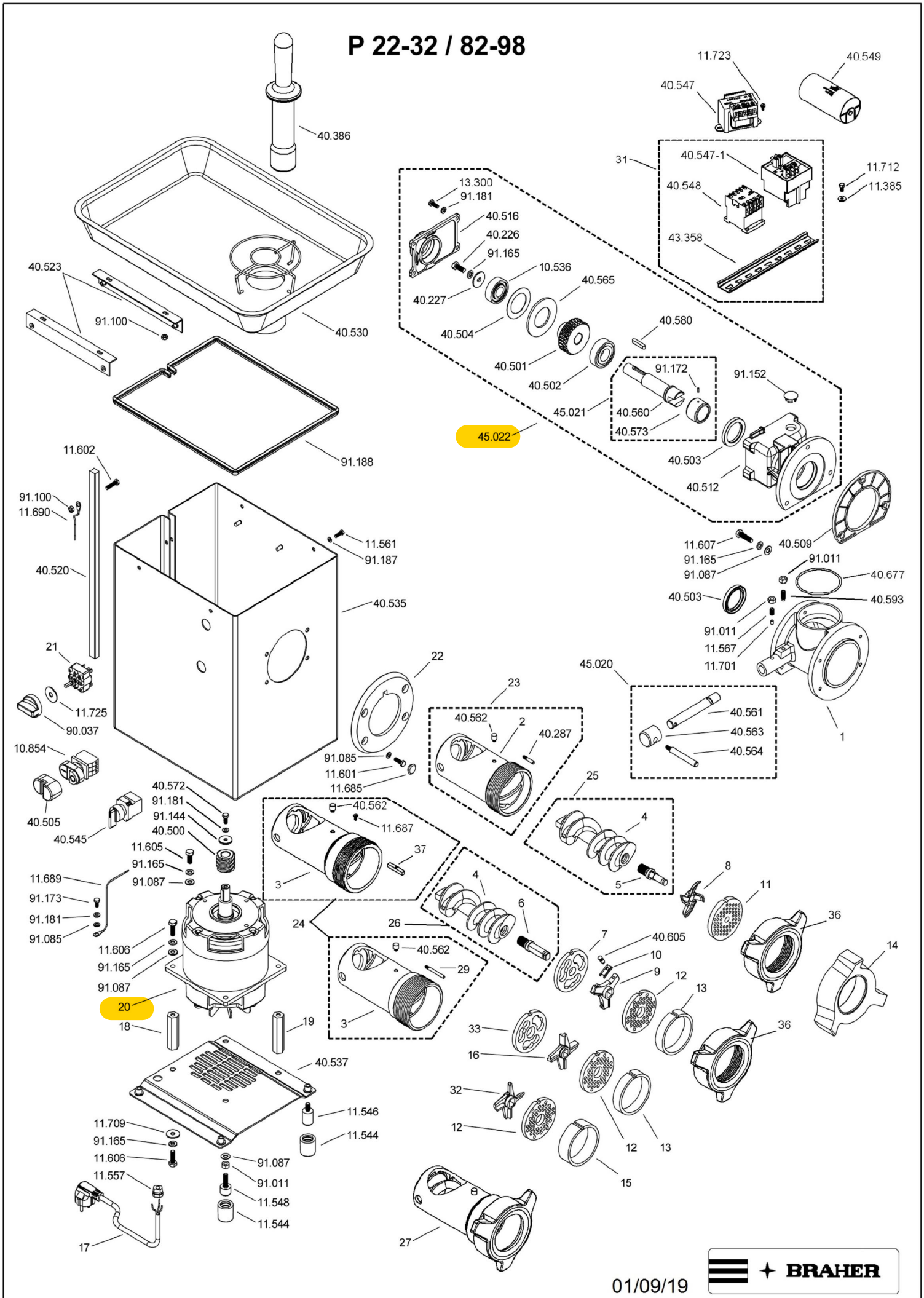
40.386
40.523
91.100
40.530
91.188
11.602
91.100
11.690
40.520
11.561
91.187
40.535
21
11.725
90.037
10.854
40.505
40.545
40.572
91.181
91.144
40.500
11.605
91.165
91.087
11.689
91.173
91.181
91.085
11.606
91.165
91.087
20
18
19
40.537
11.546
11.544
11.709
91.165
11.606
91.087
91.011
11.548
11.544
11.557
17
11.723
40.547
40.549
31
40.547-1
40.548
43.358
11.712
11.385
13.300
91.181
40.516
40.226
91.165
10.536
40.227
40.565
40.504
40.580
40.501
40.502
91.172
91.152
45.021
40.560
40.573
45.022
40.503
40.512
11.607
91.165
91.087
40.509
91.011
40.677
40.503
40.593
91.011
11.567
11.701
1
22
23
40.562
2
40.287
91.085
11.601
11.685
45.020
40.561
40.563
40.564
25
4
5
40.562
11.687
37
3
24
26
4
6
7
40.605
10
9
8
11
36
14
12
13
40.562
29
3
33
16
36
32
12
12
13
15
27
01/09/19
BRAHER